| | | |
|---|---|---|
| Rated voltage | 48 | V DC |
| Rated power | 750 | W |
| Rated torque | 2.39 | N.m |
| Peak torque | 7.17 | N.m |
| Rated speed | 3000 | RPM |
| Max speed | 4000 | RPM |
| Rated current | 18.5 | Arms |
| Peak current | 55.5 | Arms |
| Torque constant | 0.13 | N.m/AYms |
| Back EMF constant | 8.5 | V/KRPM |
| Resistance | 0.08±10% | Ω |
| Inductance | 0.31±10% | mH |
| Interia | 1.5 | $kg\ m^2 * 10^4$ |
| Motor poles | 8 | |
| Encoder | 17 bit | |

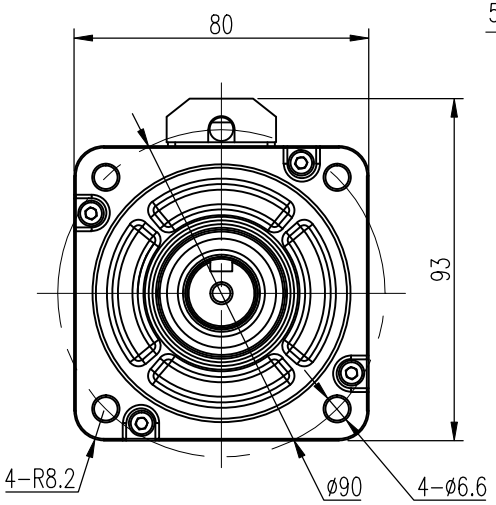


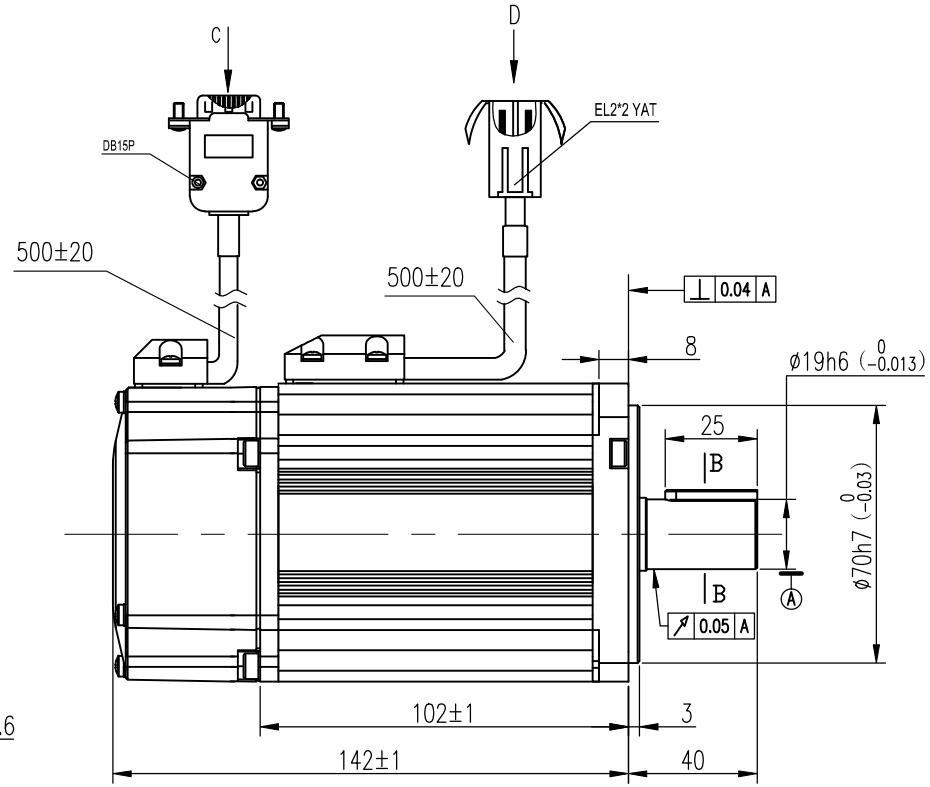


| Power connector | | | | |
|---|---|---|---|---|
| Defi | U | V | W | GND |
| Color | Red | Blue | Black | Yel/Gre |
| Pin | 1 | 2 | 3 | 4 |

| Encoder connector | | | | | |
|---|---|---|---|---|---|
| Pin | 3 | 6 | 9 | 10 | 13 |
| Color | Black | Shield | Blue | Purple | White |
| Defi | GND | PE | SD+ | SD- | +5V |

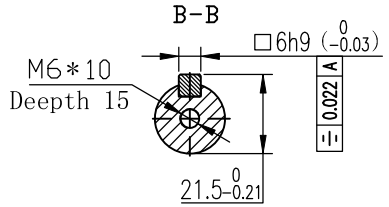


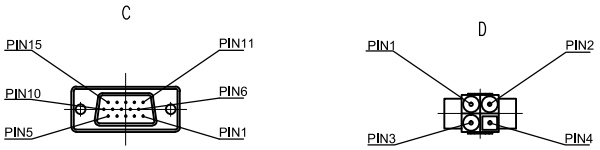


Leadshine Technology Co .Ltd

ELDM8075V48HM-E4

750w servo motor with 17 bit encoder